General Specifications

Electrical Capacity (Resistive Load)

Low/Logic Level: 50mA @ 24V DC

Other Ratings

Contact Resistance: 50 milliohms maximum
Insulation Resistance: 500 megohms minimum @ 250V DC
Dielectric Strength: 250V AC minimum for 1 minute minimum
Mechanical Life: 500,000 operations minimum
Electrical Life: 500,000 operations minimum
Nominal Operating Force: 1.96N for sculptured actuator
2.0N for piano actuator
3.0N for square & round flush actuators
Total Travel: Flush Actuators .016″ (0.4mm)
Sculptured & Piano Actuators .031″ (0.8mm)

Materials & Finishes

Actuator: Polyamide
Case: Glass fiber reinforced polyamide
Seal: Nitrile butadiene rubber
Base: Glass fiber reinforced polyester
Movable Contact: Phosphor bronze with silver plating
Stationary Contacts: Brass with silver plating
Terminals: Brass with silver plating

Environmental Data

Operating Temperature Range: –25°C through +85°C (–13°F through +185°F)
Humidity: 90 ~ 95% humidity for 96 hours @ 40°C (104°F)
Vibration: 10 ~ 55Hz with peak-to-peak amplitude of 1.5mm traversing the frequency range & returning in 1 minute; 3 right angled directions for 2 hours
Shock: 50G (490m/s^2) acceleration (tested in 6 right angled directions, with 5 shocks in each direction)

PCB Processing

Soldering: Wave Soldering Recommended. See Profile A in Supplement section.
Manual Soldering: See Profile A in Supplement section.
Cleaning: Automated cleaning. See Cleaning specifications in Supplement section.

Standards & Certifications

The JF Series tactiles have not been tested for UL recognition or CSA certification.
These switches are designed for use in a low-voltage, low-current, logic-level circuit.
When used as intended in a logic-level circuit, the results do not produce hazardous energy.

Distinctive Characteristics

Extremely low profile of 5mm from PCB to top of switch.

Rubber seal construction prevents contact contamination and allows automated soldering and cleaning.

Minimal operating force and short stroke permit light touch operation.

Dome contact gives crisp tactile and audible feedback to positively indicate circuit transfer and assures high reliability and long life.

Wide choice of body shapes and colors.

Crimped terminals provide a spring type action to ensure secure mounting and prevent dislodging during wave soldering.

Space saving body dimensions provide for compact, side-by-side mounting on a standard grid.

Terminal spacing conforms to standard .100" (2.54mm) PCB grid.

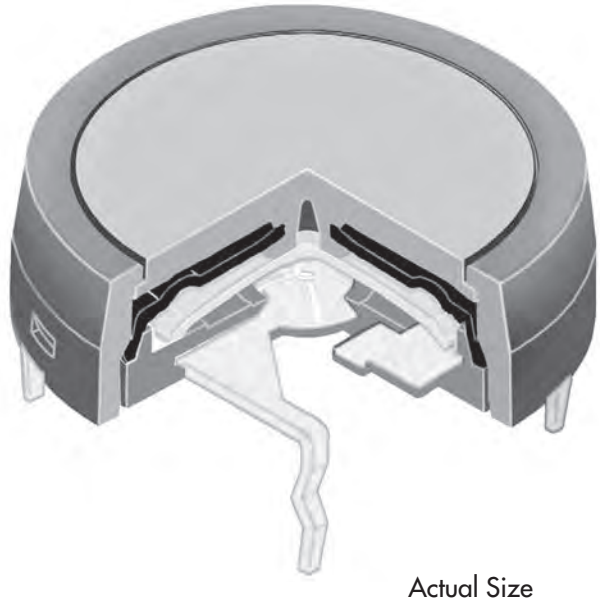

Actual Size

Common Bus Matrix

These single pole, single throw switches can be used in a keyboard matrix and, using strapped terminals, achieve a common bus electrical configuration on a single-sided PC board.

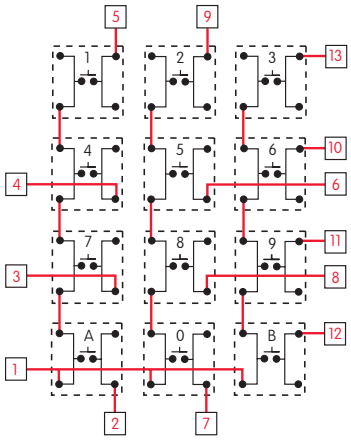

Keys (Switches)	PC Terminations 1	2	3	4	5	6	7	8	9	10	11	12	13
1	●				●								
2	●								●				
3	●												●
4	●			●									
5	●					●							
6	●									●			
7	●		●										
8	●							●					
9	●										●		
0	●						●						
A	●	●											
B	●												●

● = ON

X-Y Matrix

These single pole, single throw switches can be arranged on a single-sided PC board matrix with strapped terminals to achieve an X-Y type electrical interconnection.

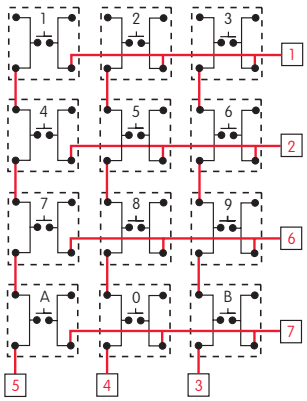

Keys (Switches)	PC Terminations 1	2	3	4	5	6	7
1	●				●		
2	●			●			
3	●		●				
4		●			●		
5		●		●			
6		●	●				
7					●	●	
8				●		●	
9			●			●	
0				●			●
A					●		●
B			●				●

● = ON

Red = PCB Trace Black = Switch Circuit

TYPICAL SWITCH ORDERING EXAMPLE

JF 15 S P 2 C

Pole & Circuit

15	SPST	OFF	(ON)
( ) = Momentary			

Terminals

P	Straight PC

Actuator Colors

C	Red
D	Orange
F	Green
G	Blue
H	Gray

Housing Shapes

C	Round (with round actuator only)
S	Square

Actuator Types

1	Square
2	Round
3	Sculptured
4	Piano

DESCRIPTION FOR TYPICAL ORDERING EXAMPLE

JF15SP2C

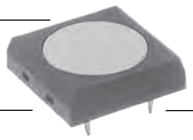

POLE & CIRCUIT

		Actuator Position ( ) = Momentary		Switch Throw & Schematic	
Pole	Model	Normal	Down		
SP	JF15	OFF	(ON)	SPST 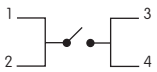	Note: Terminal numbers are shown on the switch.

HOUSING SHAPES & ACTUATOR TYPES

C Round Housing

S Square Housing

2 Round Actuator

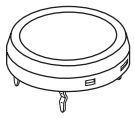

1 Square Actuator

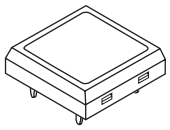

2 Round Actuator

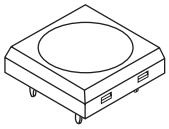

3 Sculptured Actuator

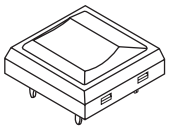

4 Piano Actuator

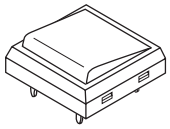

Actuator Colors Available:

C Red **D** Orange **F** Green **G** Blue **H** Gray

Housing is Black

TERMINALS & PANEL DESIGN

P Straight PC

Additional details in Typical Switch Dimensions

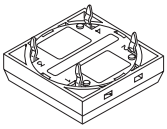

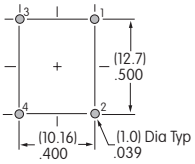

Versatile panel arrangements can be made to fit individual design needs.

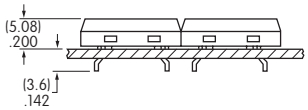

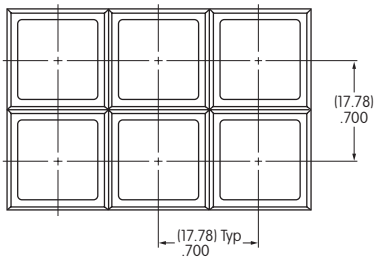

TYPICAL SWITCH DIMENSIONS

Round Actuator

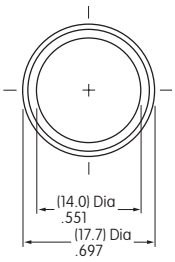

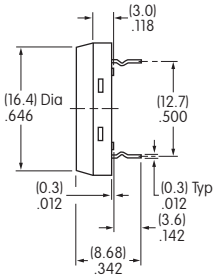

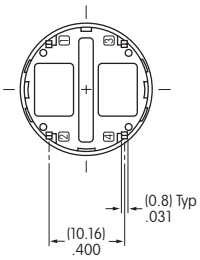

JF15CP2C

TYPICAL SWITCH DIMENSIONS

Square Actuator

JF15SP1C

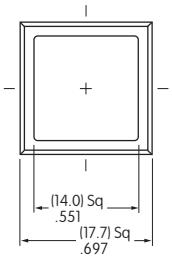

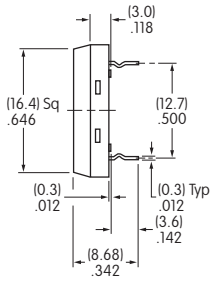

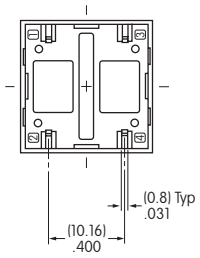

Round Actuator

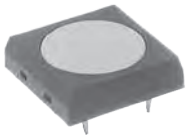

JF15SP2C

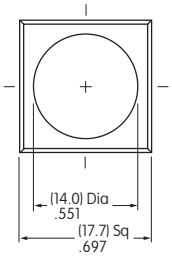

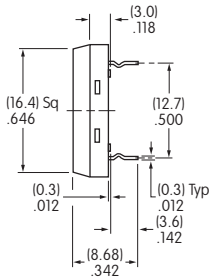

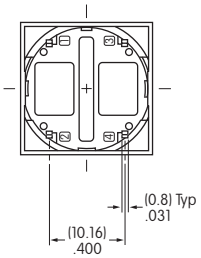

Sculptured Actuator

JF15SP3C

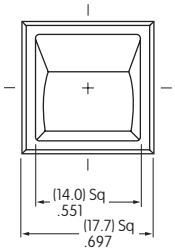

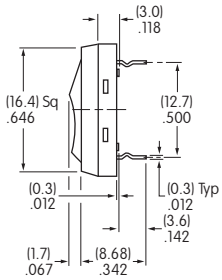

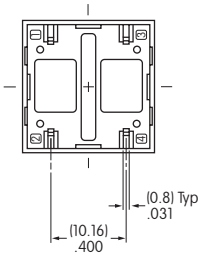

Piano Actuator

JF15SP4C

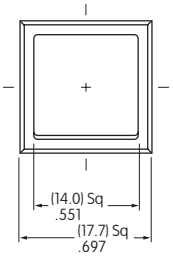

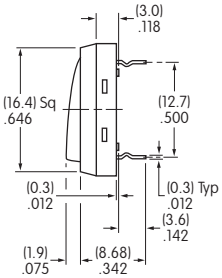

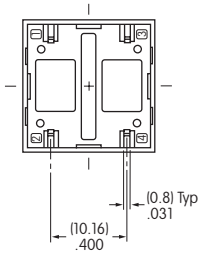

LEGENDS

NKK Switches can provide custom legends for caps. Contact factory for more information.

Shaded Areas are Printable Areas

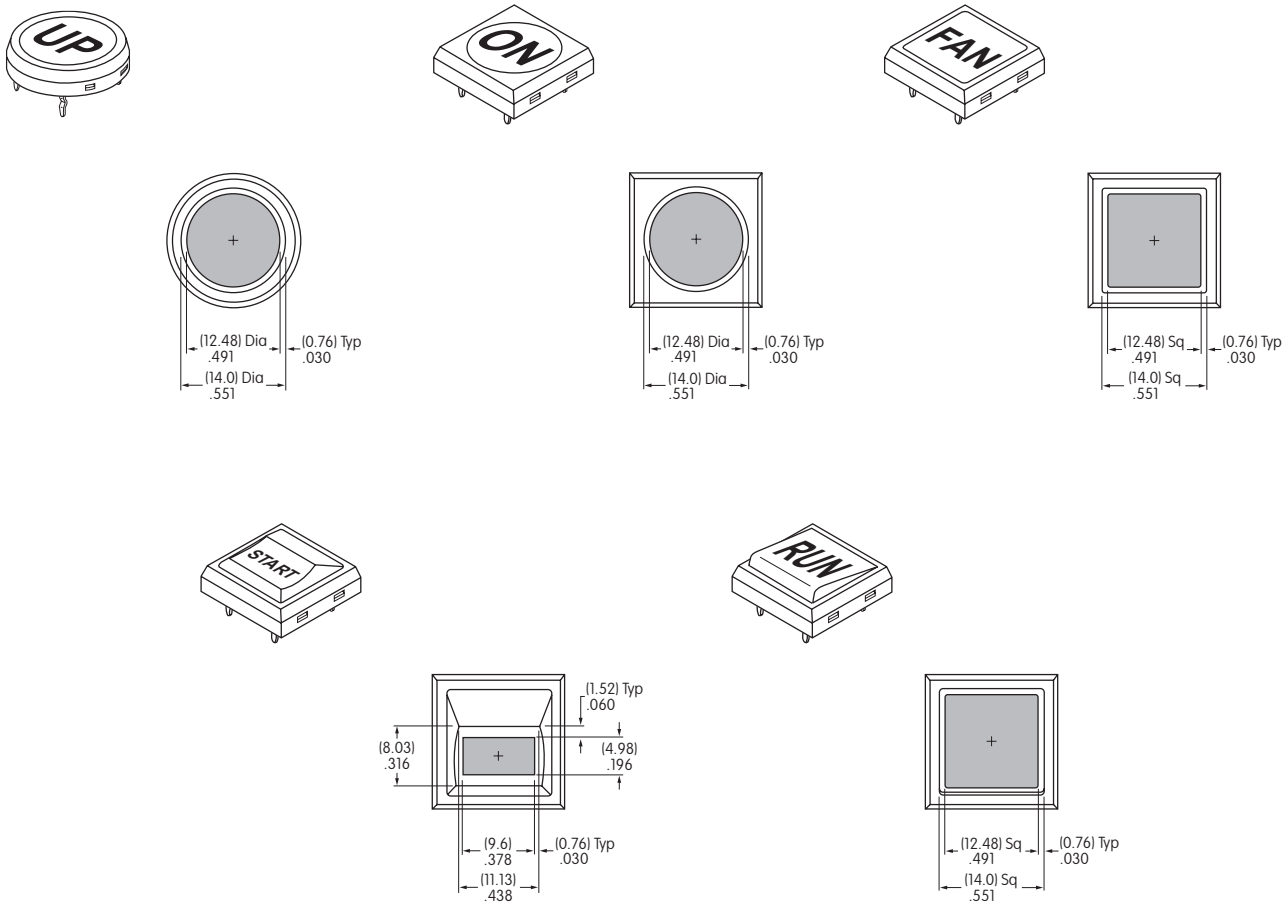

Recommended Print Methods: Screen Print or Pad Print. Epoxy based ink is recommended.

General Specifications

Electrical Capacity (Resistive Load)

Low/Logic Level: 50mA @ 24V DC

Other Ratings

Contact Resistance: 50 milliohms maximum
Insulation Resistance: 500 megohms minimum @ 250V DC
Dielectric Strength: 250V AC minimum for 1 minute minimum
Mechanical Life: 500,000 operations minimum
Electrical Life: 500,000 operations minimum
Nominal Operating Force: 3.0N for flush actuator
2.0N for sculptured actuator
Total Travel: Flush Actuators .016″ (0.4mm); Sculptured Actuator: .031″ (0.8mm)

Materials & Finishes

Actuator: Polyamide for spot illuminated; polycarbonate for full face
Case: Glass fiber reinforced polyamide
Seal: Nitrile butadiene rubber
Base: Glass fiber reinforced polyester
Movable Contact: Phosphor bronze with silver plating
Stationary Contacts: Brass with silver plating
Terminals: Brass with silver plating

Environmental Data

Operating Temperature Range: –25°C through +70°C (–13°F through +158°F)
Humidity: 90 ~ 95% humidity for 96 hours @ 40°C (104°F)
Vibration: 10 ~ 55Hz with peak-to-peak amplitude of 1.5mm traversing the frequency range & returning in 1 minute; 3 right angled directions for 2 hours
Shock: 50G (490m/s^2) acceleration (tested in 6 right angled directions, with 5 shocks in each direction)

PCB Processing

Soldering: Wave Soldering recommended. See Profile A in Supplement section.
Manual Soldering: See Profile A in Supplement section.
Cleaning: Automated cleaning. See Cleaning specifications in Supplement section.
Switches should not be operated or have any pressure on the actuators during cleaning.
Full face illuminated models suitable only for bottom board spray wash to avoid contamination of the 2-layered actuator, which may compromise the aesthetics.

Standards & Certifications

The JF Series tactiles have not been tested for UL recognition or CSA certification.
These switches are designed for use in a low-voltage, low-current, logic-level circuit.
When used as intended in a logic-level circuit, the results do not produce hazardous energy.

Distinctive Characteristics

Extremely low profile of .224″ (5.7mm) from PCB to top of switch.

Red, green, or yellow LED with spot or full face illumination.

Rubber seal construction prevents contact contamination and allows automated soldering and cleaning.

Minimal operating force and short stroke permit light touch operation.

Dome contact gives crisp tactile and audible feedback to positively indicate circuit transfer and assures high reliability and long life.

Space saving body dimensions provide for compact, side-by-side mounting on a standard grid.

Crimped terminals ensure secure mounting and prevent dislodging during wave soldering.

Terminal spacing conforms to standard .100″ (2.54mm) PCB grid.

Matching indicator available and shown at the end of Section M.

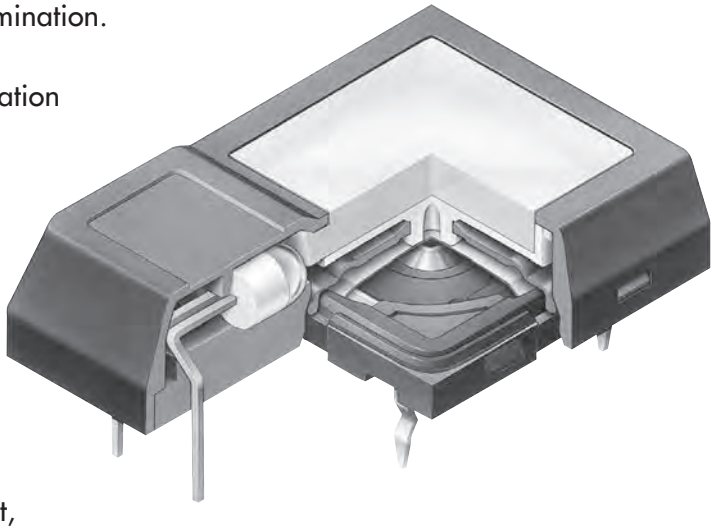

Actual Size

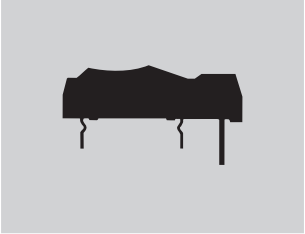

Common Bus Matrix

These single pole, single throw switches can be used in a keyboard matrix and, using strapped terminals, achieve a common bus electrical configuration on a single-sided PC board.

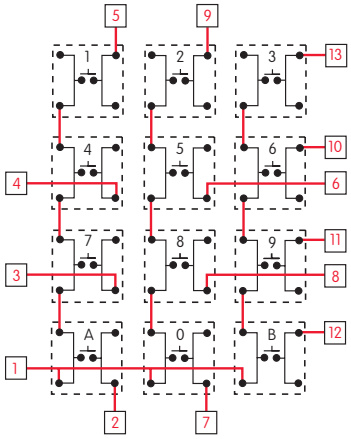

Keys (Switches) \ PC Terminations	1	2	3	4	5	6	7	8	9	10	11	12	13
1	●				●								
2	●								●				
3	●												●
4	●			●									
5	●					●							
6	●									●			
7	●		●										
8	●							●					
9	●										●		
0	●						●						
A	●	●											
B	●												●

● = ON

X-Y Matrix

These single pole, single throw switches can be arranged on a single-sided PC board matrix with strapped terminals to achieve an X-Y type electrical interconnection.

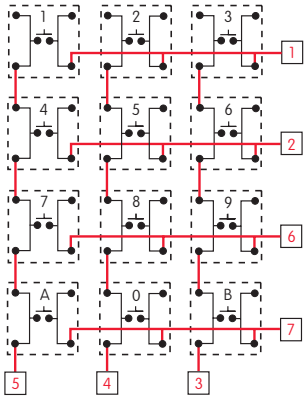

Keys (Switches) \ PC Terminations	1	2	3	4	5	6	7
1	●				●		
2	●			●			
3	●		●				
4		●			●		
5		●		●			
6		●	●				
7					●	●	
8				●		●	
9			●			●	
0				●			●
A					●		●
B			●				●

● = ON

Red = PCB Trace Black = Switch Circuit

TYPICAL SWITCH ORDERING EXAMPLE

JF 15 R P 2 C C

Pole & Circuit

15	SPST	OFF	(ON)
( ) = Momentary			

Terminals

P	Straight PC

Actuator Types

1	Square
2	Round
3	Sculptured

LED Colors

C	Red
E	Yellow
F	Green

Illumination

R	Spot
A	Full Face (with square actuator only)

Actuator Colors

Spot Illuminated	
C	Red
D	Orange
F	Green
G	Blue
H	Gray
***Full Face Illuminated**	
C	Red
E	Yellow
F	Green

*LED color must match actuator color.

DESCRIPTION FOR TYPICAL ORDERING EXAMPLE

JF15RP2CC

POLE & CIRCUIT

		Actuator Position ( ) = Momentary		Switch Throw & Schematic	LED Schematic	
Pole	Model	Normal	Down			
SP	JF15	OFF	(ON)	SPST 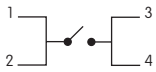		Notes: Terminal numbers are shown on switch. LED circuit is isolated & requires external power source.

ILLUMINATION & ACTUATOR TYPES

R **Spot Illumination**

1 **Square Actuator**

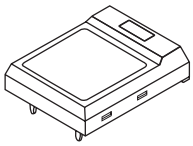

2 **Round Actuator**

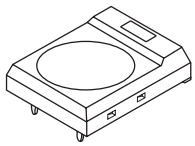

3 **Sculptured Actuator**

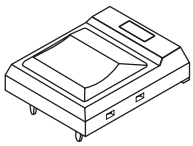

Actuator Colors Available: C, D, F, G, H
Housing is black

A **Full Face Illumination**

1 **Square Actuator**

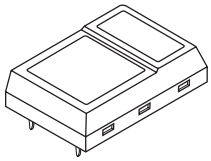

Actuator Colors Available: C, E, F
Housing is black

Color Codes: **C** Red **D** Orange **E** Yellow **F** Green **G** Blue **H** Gray

Flexible Panel Design

Versatile panel arrangements can be made to fit individual design needs.

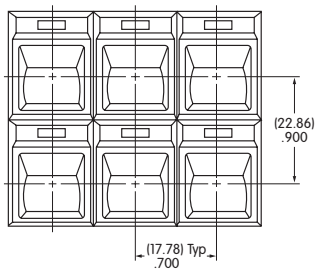

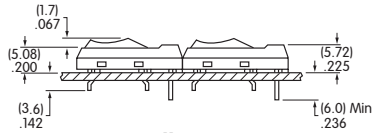

Spot Illumination

Full Face Illumination

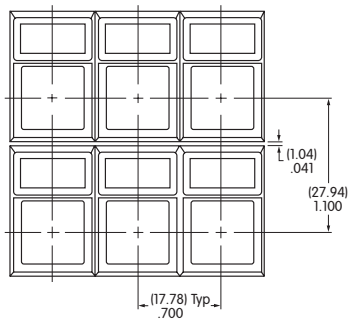

TERMINALS

P **Straight PC Terminals**

With isolated lamp circuit
Further details in Typical Switch Dimensions

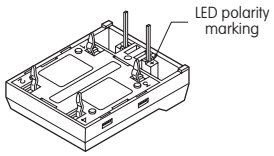

LED COLORS & SPECIFICATIONS

LEDs are supplied as an integral part of the switch. The electrical specifications shown are determined at a basic temperature of 25°C.
If the source voltage exceeds the rated voltage, a ballast resistor is required.
The resistor value can be calculated by using the formula in the Supplement section.

		Spot Illumination			Full Face Illumination		
Color		Red **C**	Yellow **E**	Green **F**	Red **C**	Yellow **E**	Green **F**
Maximum Forward Current	I_{FM}	40mA	40mA	40mA	30mA	30mA	30mA
Typical Forward Current	I_F	30mA	30mA	30mA	20mA	20mA	20mA
Forward Voltage	V_F	1.7V	2.2V	2.2V	1.77V	2.1V	2.3V
Maximum Reverse Voltage	V_{RM}	4V	4V	4V	4V	4V	4V
Current Reduction Rate Above 25°C	ΔI_F	0.67mA/°C	0.67mA/°C	0.67mA/°C	0.4mA/°C	0.4mA/°C	0.4mA/°C
Ambient Temperature Range		−25° ~ +70°C			−25° ~ +70°C		

TYPICAL SWITCH DIMENSIONS

Spot Illuminated with Square Actuator

JF15RP1CC

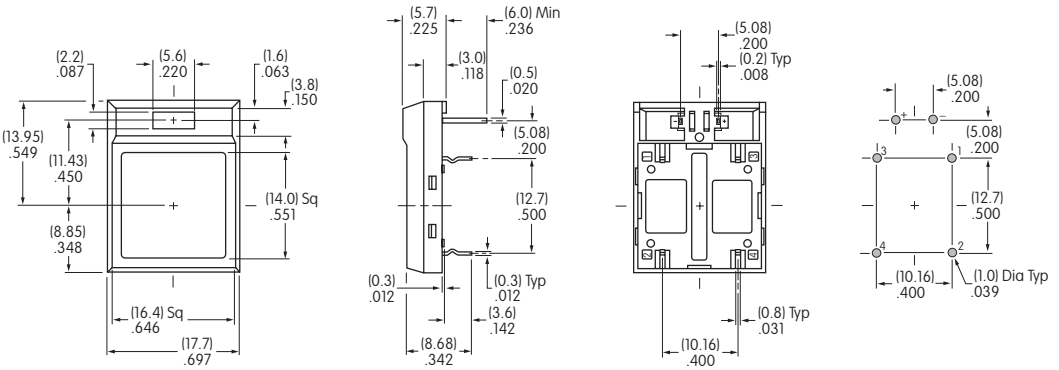

Spot Illuminated with Round Actuator

JF15RP2CC

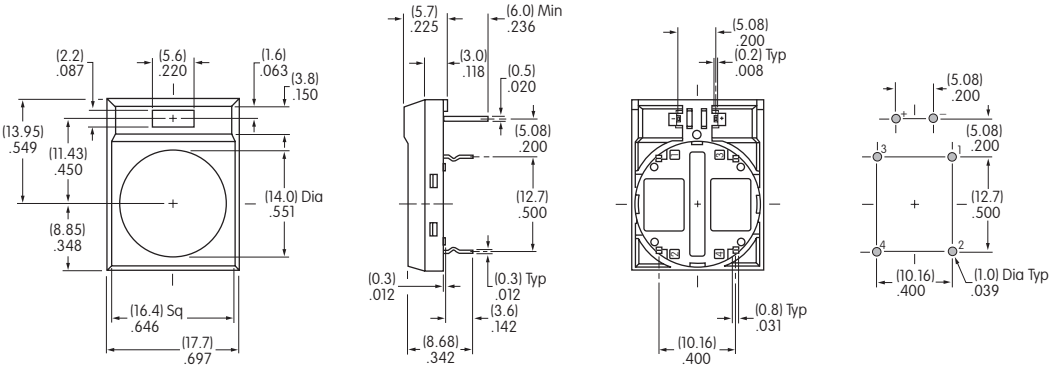

Spot Illuminated with Sculptured Actuator

JF15RP3CC

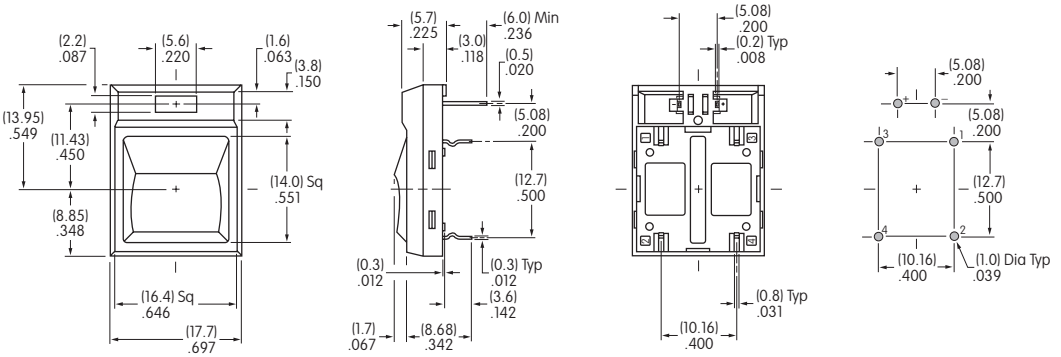

Full Face Illuminated with Square Actuator

JF15AP1CC

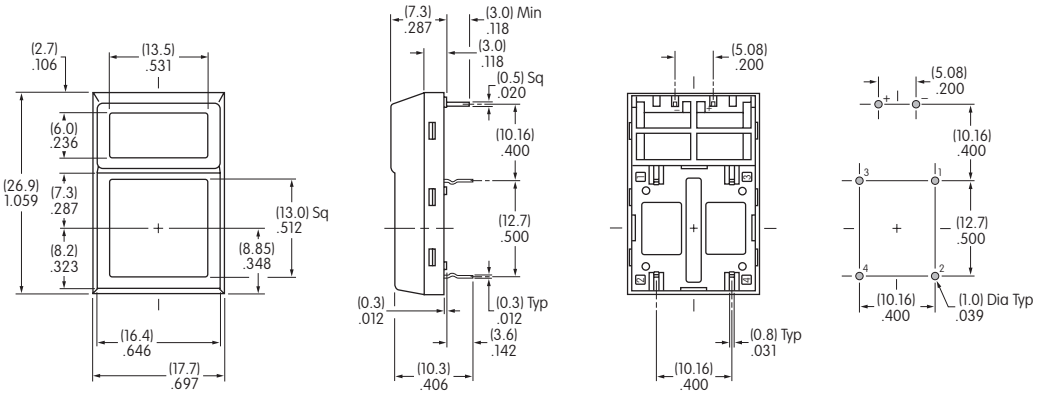

LEGENDS

NKK Switches can provide custom legends for caps. Contact factory for more information.

Suggested Printable Area

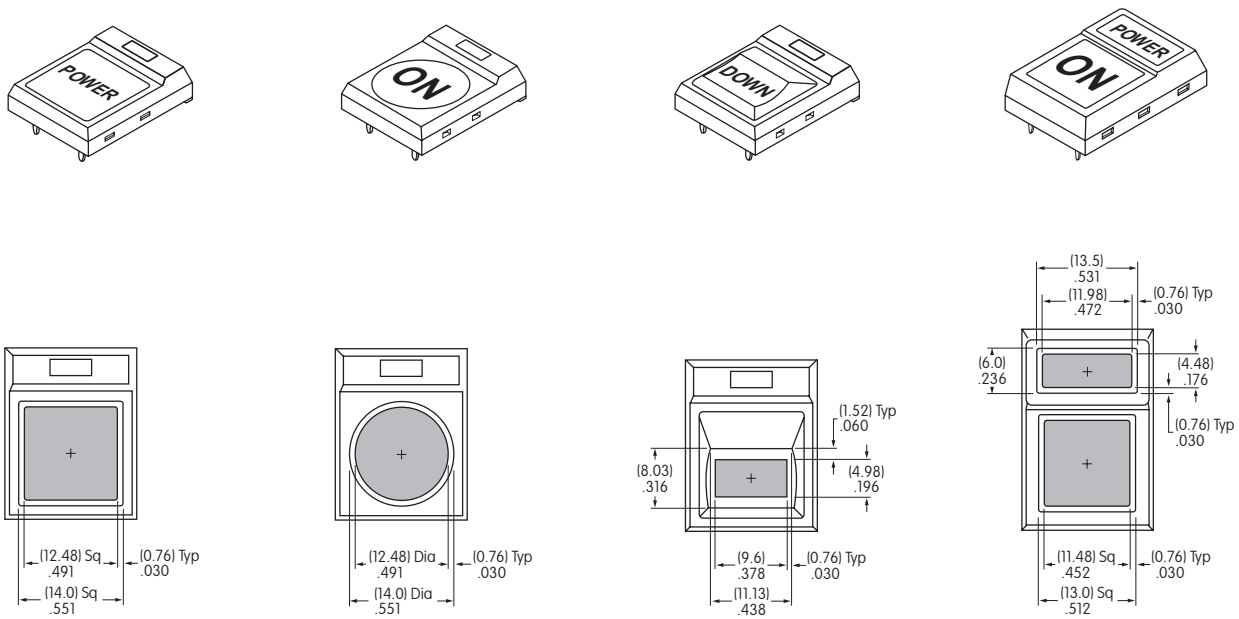

Recommended Print Method:

Screen Print or Pad Print

Epoxy based ink is recommended.

Shaded areas are printable areas.